NUMBER C-175674

3rd ANGLE PROJECTION

METRIC

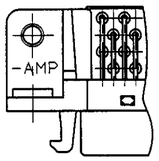

14,26Pos and 50Pos

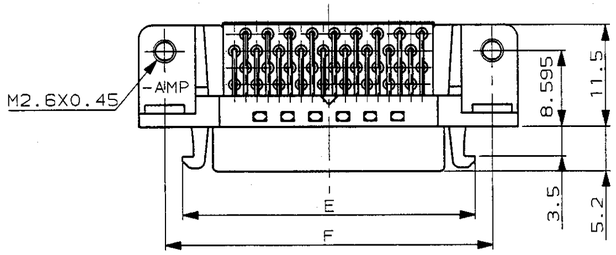

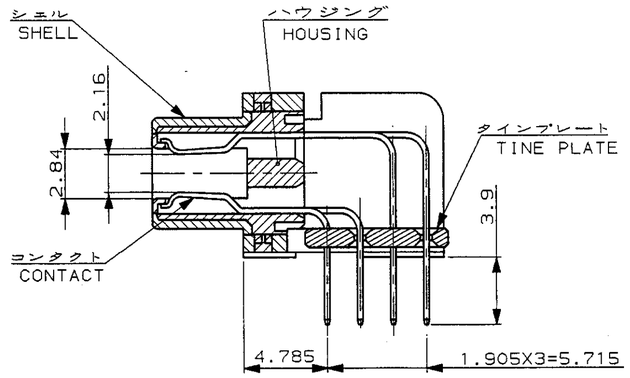

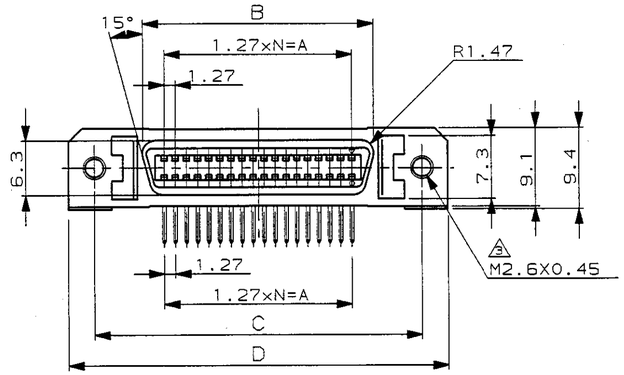

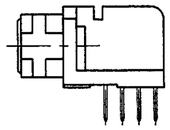

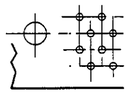

(14,26,50POS)

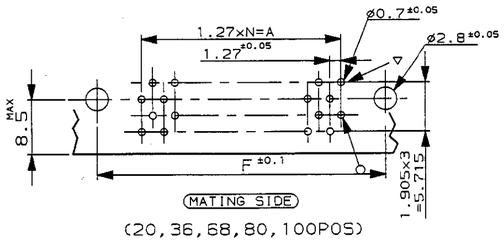

(20,36,68,80,100POS)

FIG-1

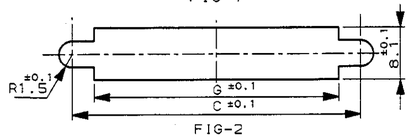

FIG-2

(THK:2mmMAX)

注　記

1. 基板パターンはFIG-1に示す通り。(コネクタ搭載面)
2. パネル取付け寸法はFIG-2に示す通り。
3. 適用ねじ;M2.6なべ小ねじ
4. かん合相手コネクタ ; 175677-X
5. 材料及び仕上げ
   ※コンタクト ; リン青銅、ニッケル下地に接触部
   金メッキ(0.3μ,0.76μ以上) タイン部 半田メッキ。
   ※シェル ; 亜鉛ダイキャスト、ニッケルメッキ。
   ※ハウジング及びタインプレート ;
   熱可塑性樹脂、UL;94V-0,色 ; 黒。
6. 推奨基板厚;2.4mm(参考)

NOTES;

1 P.C.B HOLE LAY-OUT AS SHOWN FIG-1.
(CONNECTOR MOUNTING SIDE)

2 PANNEL CUT OFF DIMENSIONS AS SHOWN FIG-2

3 USED SCREW SIZE;M 2.6 PANHEAD SCREW

4 CONNECTOR TO BE MATED;175677-X

5 MATERIAL AND FINISH

* CONTACT;PHOS-BRONZE
  FIN.;Au PL.0.3μ AND 0.76μ MIN.ON CONTACT AREA.
  AND TIN-LEAD PL. ON SOLDER TINE AREA OVER Ni.PL.
* SHELL;MAT'L DIECAST(ZINC)FIN. Ni PL.OVER COPPER
* HOUSING AND TINE PLATE; THERMOPLASTIC,UL 94V-0,BLACK

6 RECOMMENDED P.C.BOARD THK.:2.4mm(REF.)

	A	B	C	D	E	F	G		Au PLT	N	POS	PART No.
	49.53	54.53	65.55	71.45	61.55	65.55	61.9		0.76μ	39	80	3-175674-0
	62.23	67.23	78.25	84.15	74.25	78.25	74.6		0.76μ	49	100	2-175674-9
	41.91	46.91	57.93	63.83	53.93	57.93	54.2		0.76μ	33	68	2-175674-8
	30.48	35.48	46.5	52.4	42.5	46.5	42.8		0.76μ	24	50	2-175674-7
OBSOLETE	21.59	26.59	37.61	43.51	33.61	37.61	33.9		0.76μ	17	36	2-175674-5
OBSOLETE	15.24	20.24	31.26	37.16	27.26	31.26	27.6		0.76μ	12	26	2-175674-4
OBSOLETE	11.43	16.43	27.45	33.35	23.45	27.45	23.8		0.76μ	9	20	2-175674-2
	7.62	12.62	23.64	29.54	19.64	23.64	19.9		0.76μ	6	14	2-175674-1
	49.53	54.53	65.55	71.45	61.55	65.55	61.9		0.3μ	39	80	1-175674-0
	62.23	67.23	78.25	84.15	74.25	78.25	74.6		0.3μ	49	100	175674-9
	41.91	46.91	57.93	63.83	53.93	57.93	54.2		0.3μ	33	68	175674-8
	30.48	35.48	46.5	52.4	42.5	46.5	42.8		0.3μ	24	50	175674-7
OBSOLETE	21.59	26.59	37.61	43.51	33.61	37.61	33.9		0.3μ	17	36	175674-5
OBSOLETE	15.24	20.24	31.26	37.16	27.26	31.26	27.6		0.3μ	12	26	175674-4
OBSOLETE	11.43	16.43	27.45	33.35	23.45	27.45	23.8		0.3μ	9	20	175674-2
	7.62	12.62	23.64	29.54	19.64	23.64	19.9		0.3μ	6	14	175674-1

LTR	REVISION RECORD	DR	CHK	DATE
K	OBSOLETE P/N -2,-4,-5,2- -2 2- -4,2- -5(FJ00-0185-99)	H.T	K.A	30/NOV '99
J	REVISED (J-12319)	H.K	R.N	7/FEB '90
H	REDRAWN W/CHANGE (J-10998)	H.K	Y.F	7/SEP '89

AMP (JAPAN), LTD. Kawasaki, Japan

N / mm² (AWG -)	INSULATION DIA / - mmø
MATERIAL	SEE NOTES.
FINISH	SEE TABLE
DR.	6-JUN 1989 H.KODAMA
DE.	
CHK.	7-SEP 1989 Y.FUJIURA
APP.	11-SEP 1989 R.NISHIMURA

NAME: CHAMP .050 Series (II) REC HEADER ASS'Y (L;3.9mm) (WITHOUT RETENTION LEG)

GENERAL TOLERANCE: 0<=x< 10 ; ±0.2; 10<=x< 30 ; ±0.25; 30<=x<100 ; ±0.3; ANGLES ; ±3°

SIZE A2 | LOC J | NUMBER C-175674

SCALE 2-1 | REV. K | SHEET 1 OF 1

CUSTOMER DRAWING

DIMENSIONS IN MILLIMETERS. DO NOT SCALE PRINT

PRINT DIST

AMP-J REV.10/'83